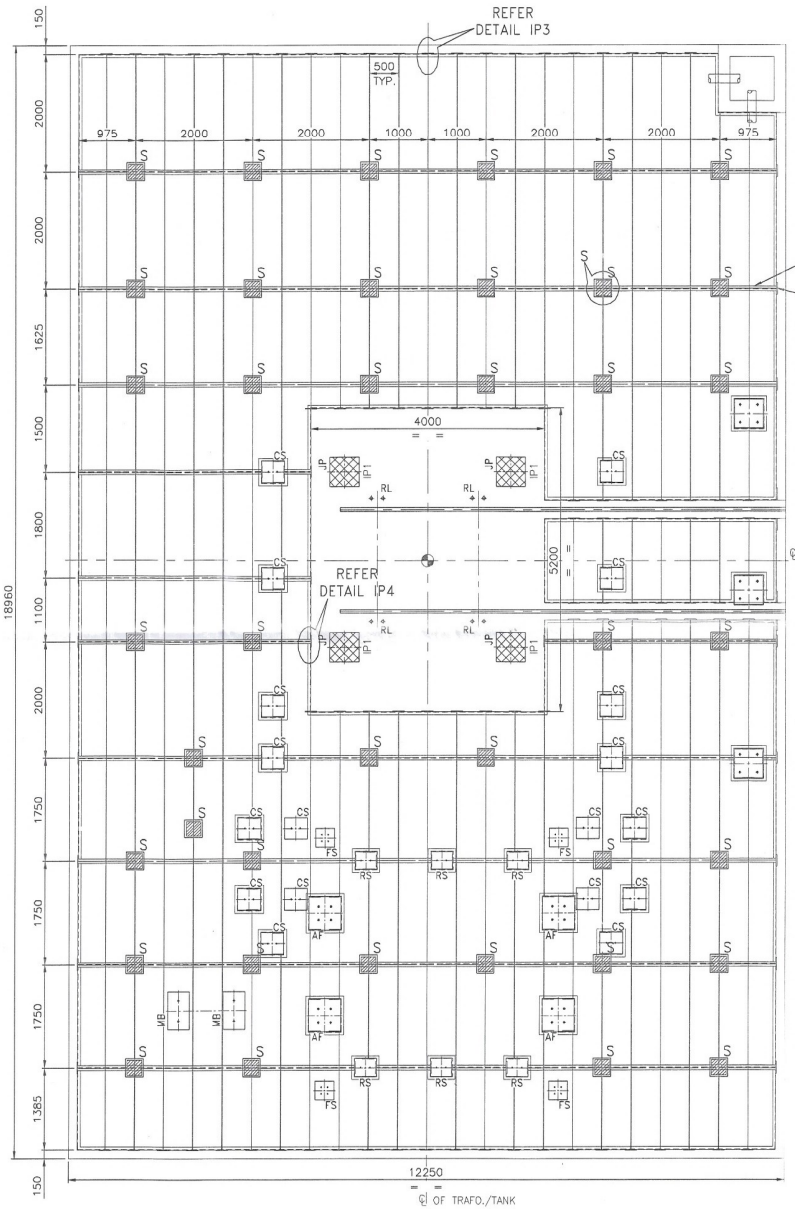

GRATING PLAN
(APPLICALE FOR TRANSFORMER-1)
(SCALE 1:50)

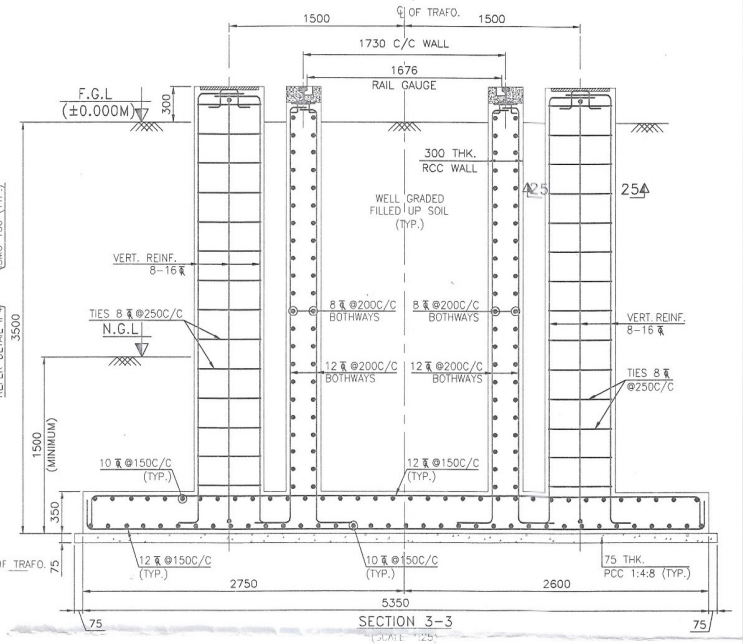

SECTION 3-3
(SCALE 1:25)

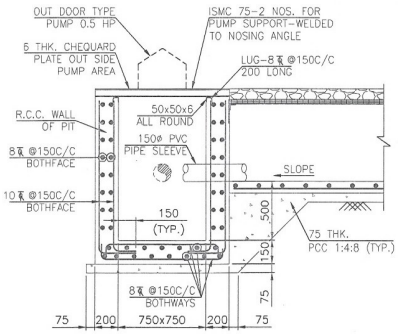

SECTION 4-4
(SCALE 1:25)

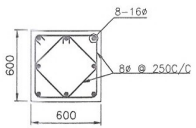

SECTION 25-25
(SCALE 1:25)

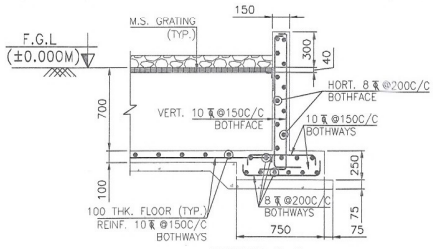

SECTION 5-5
(SCALE 1:25)

NOTE

1. ALL DIMENSIONS ARE IN MILLIMETERS, LEVELS AND CO-ORDINATES ARE IN METERS.
2. FOR ALL OTHER NOTES AND LEGENDS PLEASE REFER THIS DRAWING 01 OF 08.

Drawing is approved subject to overall ... the contractor ... agreement ... for the work

28.2.20
Chief Engineer (Civil)
B.S.P.T.C.L

28/02/2020
Superintending Engineer (Civil)
BSPTCL

28.02
Executive Engineer (Civil)
BSPTCL
25.02.2020
Assistant Engineer (Civil)
BSPTCL

REFERENCE DRAWINGS

1. KEC-SB937-GRL-01-1001 – OVERALL GENERAL ARRANGEMENT LAYOUT PLAN.
2. KEC-SB937-GRL-90-0002 – OVERALL FOUNDATION LAYOUT.
3. KEC-SB937-GRL-94-1310 – FOUNDATION BOLT DETAILS FOR EQUIPMENT

REV	DATE	DESCRIPTION	BY	ELEC.	CIVIL	APPRD.
0	08.02.2020	ISSUED FOR APPROVAL	AGN	-	VDG/DPK	SNC

BIHAR STATE POWER TRANSMISSION COMPANY LTD.(BSPTCL)

TITAL:-RCC DETAILS OF FOUNDATION FOR 160MVA TRANSFORMER

DWG. NO:-CD_200MVATRANSF_03-03

SCALE-1:100 | SHEET 03OF08

SIZE - A2